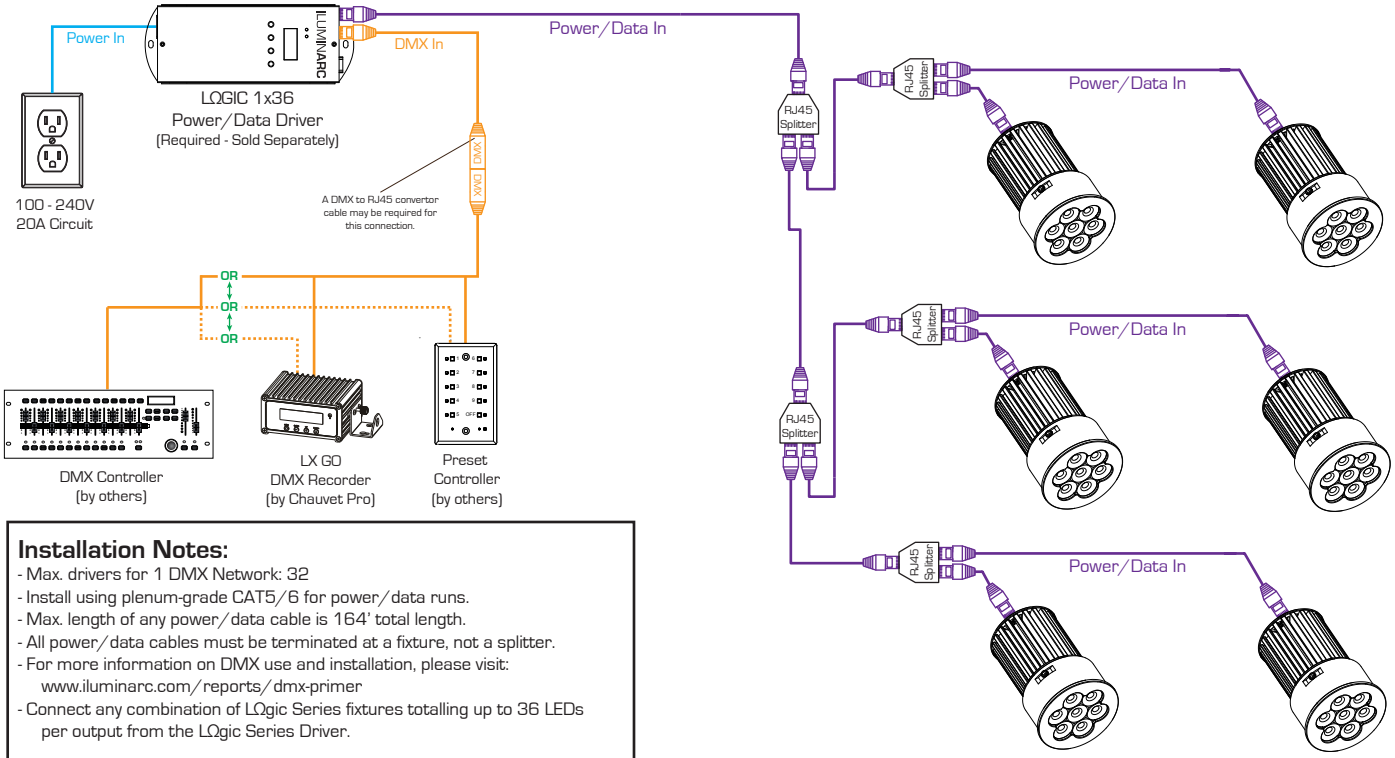

Installation Notes:

- Max. drivers for 1 DMX Network: 32
- Install using plenum-grade CAT5/6 for power/data runs.
- Max. length of any power/data cable is 164' total length.
- All power/data cables must be terminated at a fixture, not a splitter.
- For more information on DMX use and installation, please visit: www.iluminarc.com/reports/dmx-primer
- Connect any combination of LΩgic Series fixtures totalling up to 36 LEDs per output from the LΩgic Series Driver.

Key:

Power — DMX — Power/Data ····· Temp. DMX

ILUMINARC®

Typical Installation: Ilumipod LΩgic 6 RGB

www.iluminarc.com For Illustrative Purposes Only - **NOT TO SCALE** V2.0